Product Specification Sheet

ActionJac 5SS-MSJ-U 6:1

Call 800-321-7800 or visit us online at www.nookindustries.com to configure and order your ActionJac 5SS-MSJ-U 6:1 today!

2D/3D CAD ONLINE

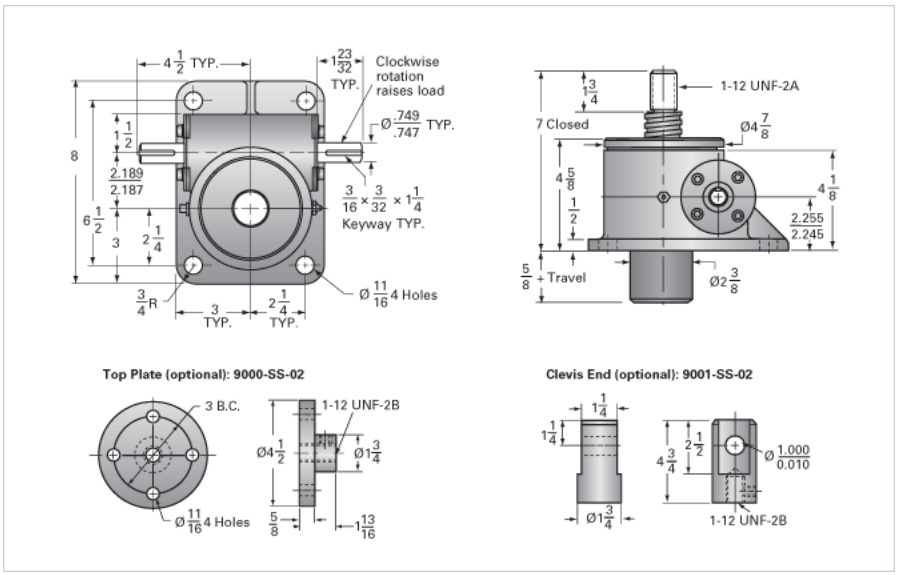

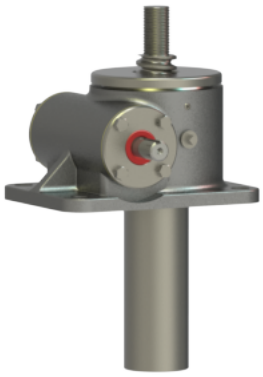

Details	
Capacity [Ton]	1.67
Gear Ratio	6:1
Turns of Worm per Inch Travel	16
Torque to Raise 1 lb. [in-lb]	0.0376
Lifting Screw Diameter [in]	1.50
Screw Lead [in]	0.375
Root Diameter [in]	1.066
Tare Drag Torque [in-lb]	10
Performance Specifications	
Maximum Allowable Input [hp]	3.00
Maximum Input Torque [in-lb]	125
Maximum Load at 1750 RPM	2873
Starting Torque	2 x Running Torque
Weight	
Base 0 Travel [lb]	32
Per Inch of Travel [lb]	0.70
Grease [lb]	1.0