Product Specification Sheet

## ActionJac 20SS-MSJ-I 8:1

Call 800-321-7800 or visit us online at www.nookindustries.com to configure and order your ActionJac 20SS-MSJ-I 8:1 today!

2D/3D CAD ONLINE

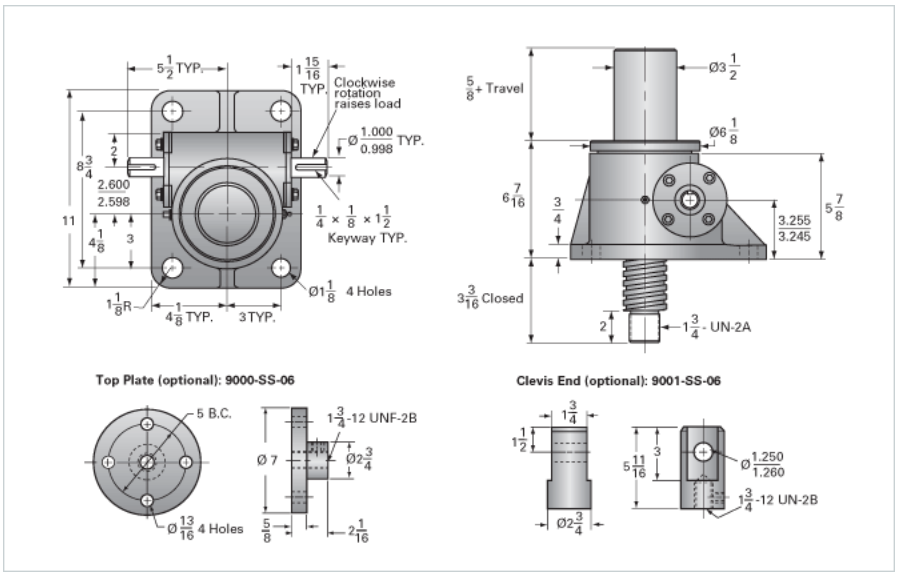


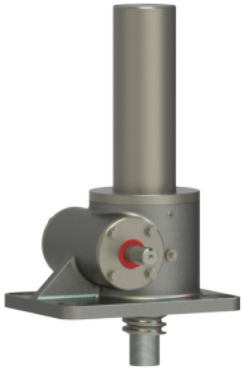

| | |
|---|---|
| **Details** | |
| Capacity [Ton] | 6.66 |
| Gear Ratio | 8:1 |
| Turns of Worm per Inch Travel | 16 |
| Torque to Raise 1 lb. [in-lb] | 0.0435 |
| Lifting Screw Diameter [in] | 2.50 |
| Screw Lead [in] | 0.500 |
| Root Diameter [in] | 1.908 |
| Tare Drag Torque [in-lb] | 40 |
| **Performance Specifications** | |
| Maximum Allowable Input [hp] | 5.00 |
| Maximum Input Torque [in-lb] | 580 |
| Maximum Load at 1750 RPM | 4140 |
| Starting Torque | 2 x Running Torque |
| **Weight** | |
| Base 0 Travel [lb] | 85 |
| Per Inch of Travel [lb] | 2.00 |
| Grease [lb] | 2.3 |