Product Specification Sheet

ActionJac EM05-BSJ-I 20:1

Call 800-321-7800 or visit us online at www.nookindustries.com to configure and order your ActionJac EM05-BSJ-I 20:1 today!

2D/3D CAD ONLINE

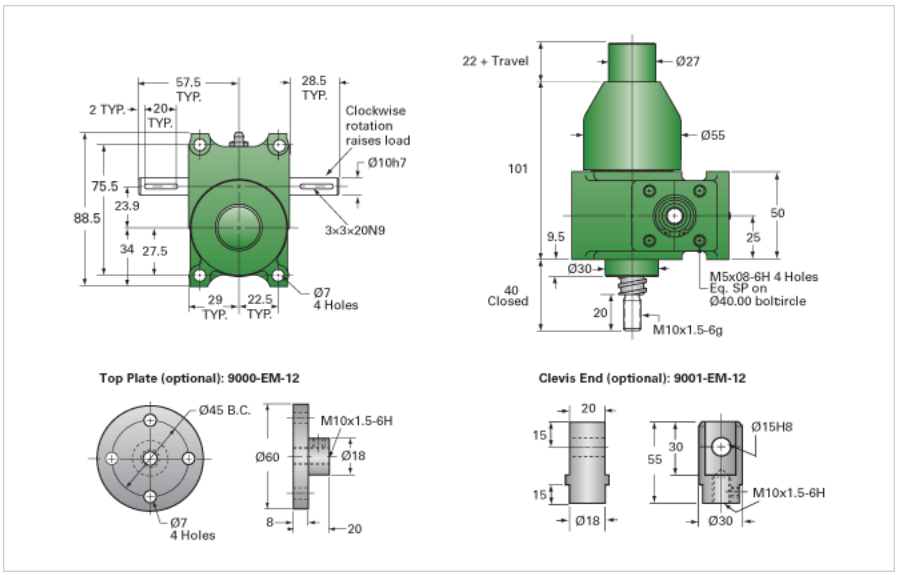

Details	
Capacity [kN]	5
Gear Ratio	20:1
Travel for 1 Turn of Worm [mm]	0.25
Torque to Raise 1 kN [Nm]	0.10
No Load Torque [Nm]	0.11
Lifting Screw Diameter [mm]	15.7
Screw Lead [mm]	5
Root Diameter [mm]	12.9
BackDrive Holding Torque [Nm]	0.5
Performance Specifications	
Maximum Allowable Input [kW]	0.09
Maximum Input Torque [Nm]	0.51
Maximum Load at 1425 RPM [kN]	5
Maximum Worm Speed at Rated Load [rpm]	1625
Starting Torque	1.5 x Running Torque
Weight	
Base 0 Travel [kg]	1.36
Per 100mm of Travel [kg]	0.14
Grease [kg]	0.14