Product Specification Sheet

ActionJac 1-MSJ-U 20:1

Call 800-321-7800 or visit us online at www.nookindustries.com to configure and order your ActionJac 1-MSJ-U 20:1 today!

2D/3D CAD ONLINE

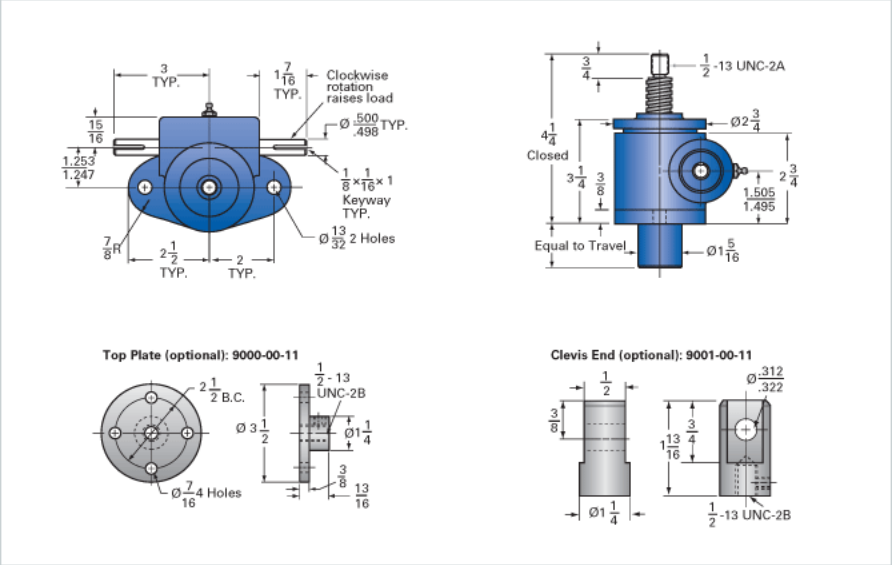

Details	
Capacity [Ton]	1
Gear Ratio	20:1
Turns of Worm per Inch Travel	100
Torque to Raise 1 lb. [in-lb]	0.0105
Lifting Screw Diameter [in]	0.75
Screw Lead [in]	0.200
Root Diameter [in]	0.502
Tare Drag Torque [in-lb]	3
Performance Specifications	
Maximum Allowable Input [hp]	0.25
Maximum Input Torque [in-lb]	21
Maximum Worm Speed at Rated Load [rpm]	750
Maximum Load at 1750 RPM [lb]	857
Starting Torque	2 x Running Torque
Weight	
Base 0 Travel [lb]	5.5
Per Inch of Travel [lb]	0.30
Grease [lb]	0.5