Product Specification Sheet

ActionJac 2R-MSJ-IR 6:1

Call 800-321-7800 or visit us online at www.nookindustries.com to configure and order your ActionJac 2R-MSJ-IR 6:1 today!

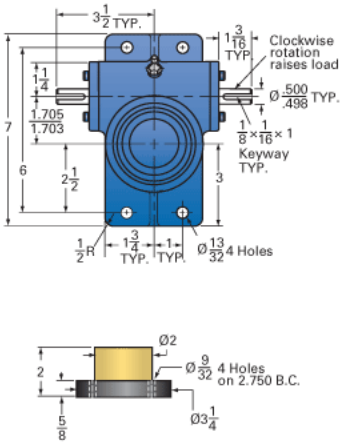

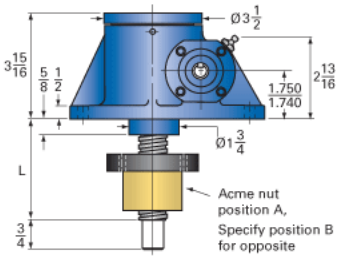

For ordering, specify "L" dimension

L (min) = travel + 3 5/8

Details	
Capacity [Ton]	2
Gear Ratio	6:1
Turns of Worm per Inch Travel	24
Torque to Raise 1 lb. [in-lb]	0.0250
Lifting Screw Diameter [in]	1.00
Screw Lead [in]	0.250
Root Diameter [in]	0.698
Tare Drag Torque [in-lb]	4
Performance Specifications	
Maximum Allowable Input [hp]	2.00
Maximum Input Torque [in-lb]	100
Maximum Worm Speed at Rated Load [rpm]	1260
Maximum Load at 1750 RPM [lb]	2881
Starting Torque	2 x Running Torque
Weight	
Base 0 Travel [lb]	15
Per Inch of Travel [lb]	0.45
Grease [lb]	0.5