Product Specification Sheet

ActionJac 1HL-BSJ-U 5:1

Call 800-321-7800 or visit us online at www.nookindustries.com to configure and order your ActionJac 1HL-BSJ-U 5:1 today!

2D/3D CAD ONLINE

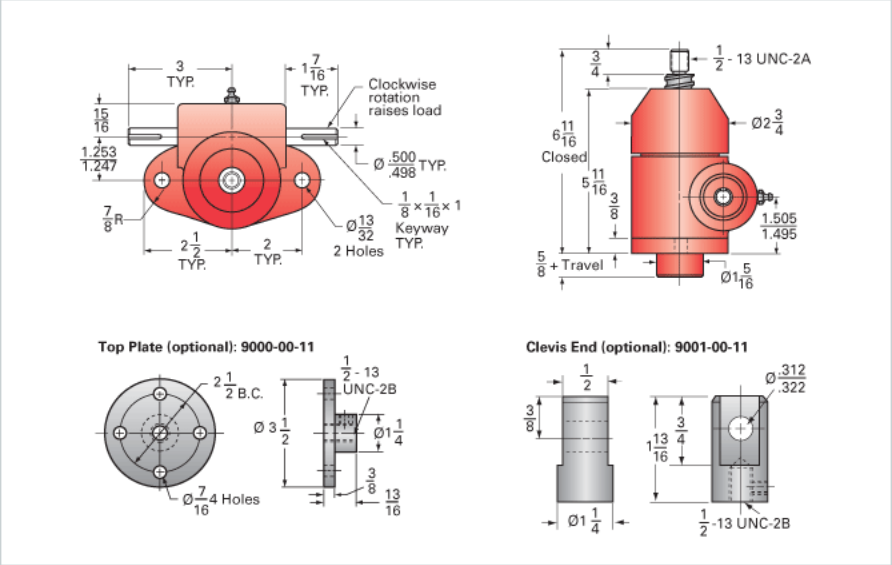

Details	
Capacity [Ton]	1
Gear Ratio	5:1
Turns of Worm per Inch Travel	10
Torque to Raise 1 lb. [in-lb]	0.0241
Lifting Screw Diameter [in]	0.75
Screw Lead [in]	0.500
Root Diameter [in]	0.602
BackDrive Holding Torque [ft-lb]	3.5
Tare Drag Torque [in-lb]	3
Performance Specifications	
Maximum Allowable Input [hp]	0.50
Maximum Input Torque [in-lb]	48.2
Maximum Worm Speed at Rated Load [rpm]	654
Maximum Load at 1750 RPM [lb]	747
Starting Torque	1.5 x Running Torque
Weight	
Base 0 Travel [lb]	8
Per Inch of Travel [lb]	0.04
Grease [lb]	0.5