Product Specification Sheet

## ActionJac 5HL-BSJ-UR 24:1

Call 800-321-7800 or visit us online at www.nookindustries.com to configure and order your ActionJac 5HL-BSJ-UR 24:1 today!

2D/3D CAD ONLINE

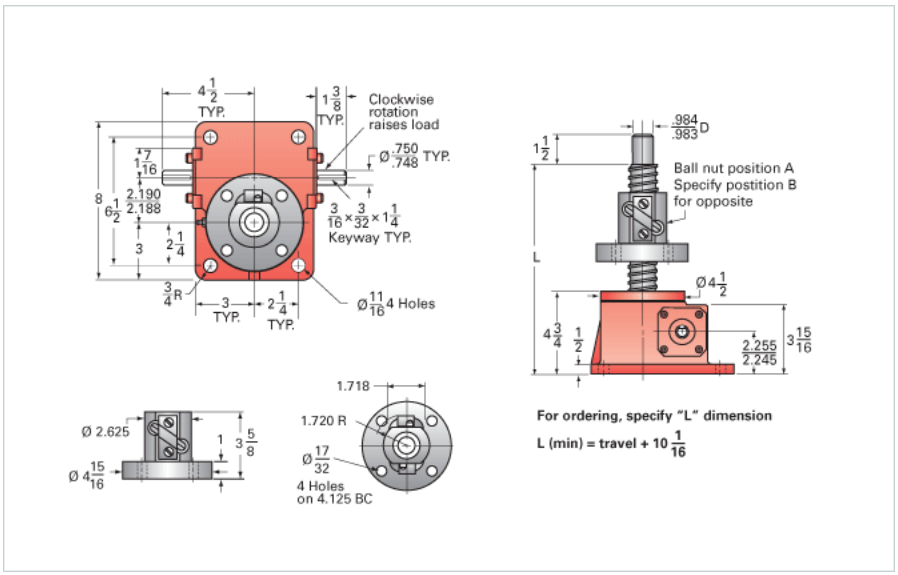

| | |
|---|---|
| **Details** | |
| Capacity [Ton] | 5 |
| Gear Ratio | 24:1 |
| Turns of Worm per Inch Travel | 24 |
| Torque to Raise 1 lb. [in-lb] | 0.0153 |
| Lifting Screw Diameter [in] | 1.50 |
| Screw Lead [in] | 1.000 |
| Root Diameter [in] | 1.140 |
| BackDrive Holding Torque [ft-lb] | 10 |
| Tare Drag Torque [in-lb] | 10 |
| **Performance Specifications** | |
| Maximum Allowable Input [hp] | 0.75 |
| Maximum Input Torque [in-lb] | 153 |
| Maximum Worm Speed at Rated Load [rpm] | 308 |
| Maximum Load at 1750 RPM [lb] | 1765 |
| Starting Torque | 1.5 x Running Torque |
| **Weight** | |
| Base 0 Travel [lb] | 35 |
| Per Inch of Travel [lb] | 0.60 |
| Grease [lb] | 1.0 |