Product Specification Sheet

ActionJac 5HL-BSJ-IK 24:1

Call 800-321-7800 or visit us online at www.nookindustries.com to configure and order your ActionJac 5HL-BSJ-IK 24:1 today!

2D/3D CAD ONLINE

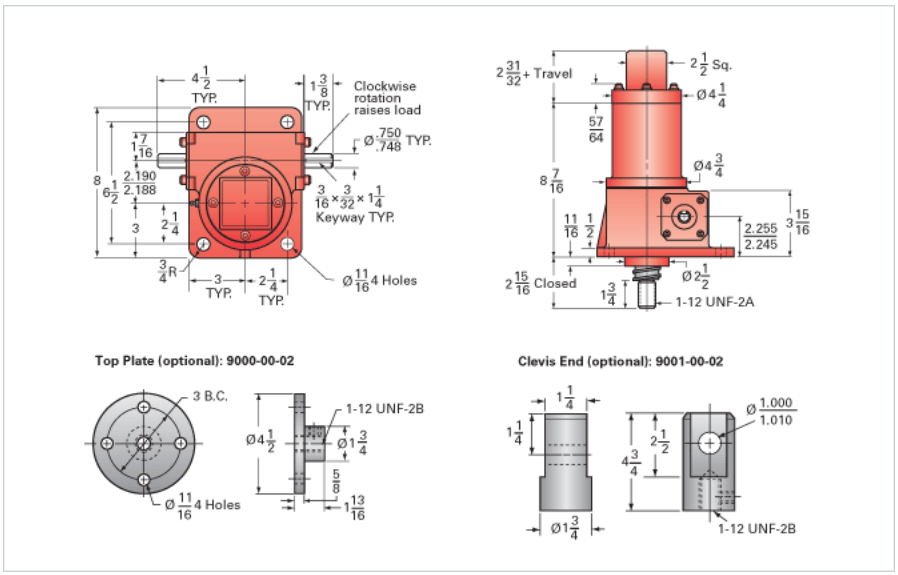

Details	
Capacity [Ton]	5
Gear Ratio	24:1
Turns of Worm per Inch Travel	24
Torque to Raise 1 lb. [in-lb]	0.0168
Lifting Screw Diameter [in]	1.50
Screw Lead [in]	1.000
Root Diameter [in]	1.140
BackDrive Holding Torque [ft-lb]	10.0
Tare Drag Torque [in-lb]	10
Performance Specifications	
Maximum Allowable Input [hp]	0.75
Maximum Input Torque [in-lb]	153
Maximum Worm Speed at Rated Load [rpm]	280
Maximum Load at 1750 RPM [lb]	1600
Starting Torque	1.5 x Running Torque
Weight	
Base 0 Travel [lb]	35
Per Inch of Travel [lb]	0.60
Grease [lb]	1.0