Product Specification Sheet

EGZ 30

Call 800-321-7800 or visit us online at www.nookindustries.com to configure and order your EGZ 30 today!

2D/3D CAD ONLINE

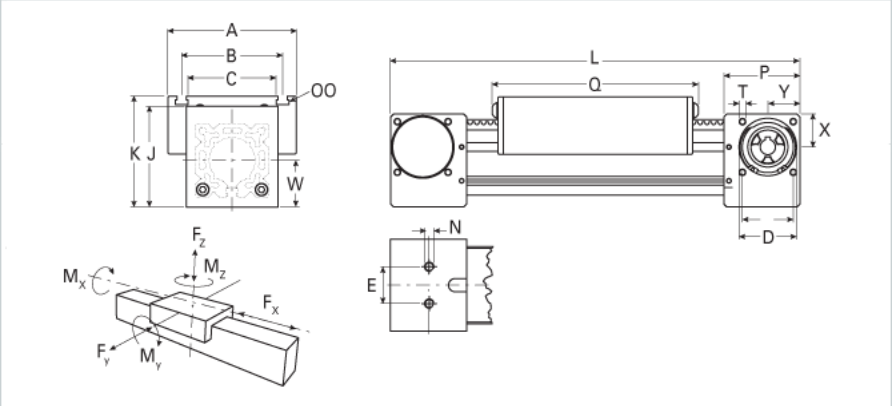

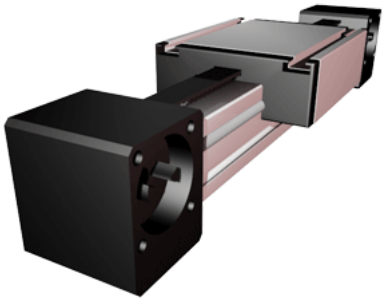

Details	
Size	30
Belt	3M12
MM/REV	75
Number of Teeth	25
Dimensions	
A [mm]	70
B [mm]	56
Basic Length L [mm]	158
C [mm]	42
D [mm]	28
E [mm]	13
F [mm]	25
H [mm]	-
J [mm]	44
K [mm]	47
MM	-
N	M5
OO	M6
P [mm]	36
Q [mm]	82
T	M4
U [mm]	-
V [mm]	-
W [mm]	21
X [mm]	16
Y [mm]	16
Shaft Key [mm]	2x2x12
Shaft Diameter h6 x Length [mm]	6 x 15
Shaft Diameter and Length [mm]	6 x 15
Key	2x2x12
Speed	
Speed Maximum [m/s]	2
Forces and Torques	
No Load Torque [Nm]	0.2
Tensile force 0.2 sec [N]	280
Tensile force permanent [N]	200
Fx dynamic [N]	180
Fy dynamic [N]	60
Fz dynamic [N]	60
Mx dynamic [Nm]	5
My dynamic [Nm]	6
Mz dynamic [Nm]	7
Fx static [N]	200
Fy static [N]	90
Fz static [N]	90
Mx static [Nm]	10
My static [Nm]	13
Mz static [Nm]	14
Geometrical moments of inertia of aluminum profile	
Elastic modulus [N/mm²]	70000
Ix [mm⁴]	40900
Iy [mm⁴]	40000
Weight	

Additional Weight per 100 mm [kg]	0.13
Basic Weight [kg]	0.8
Values for Calulating Inertias	
Pulley Material	Steel
Pulley Diameter [mm]	23.87
Effective Pulley Width [mm]	42
Belt Weight [kg/m]	0.037
Standard Carriage Weight [kg]	0.18
No-load torque [Nm]	0.2
Friction Coefficient	0.01