Product Specification Sheet

ELT 125 Dual Carriage

Call 800-321-7800 or visit us online at www.nookindustries.com to configure and order your ELT 125 Dual Carriage today!

2D/3D CAD ONLINE

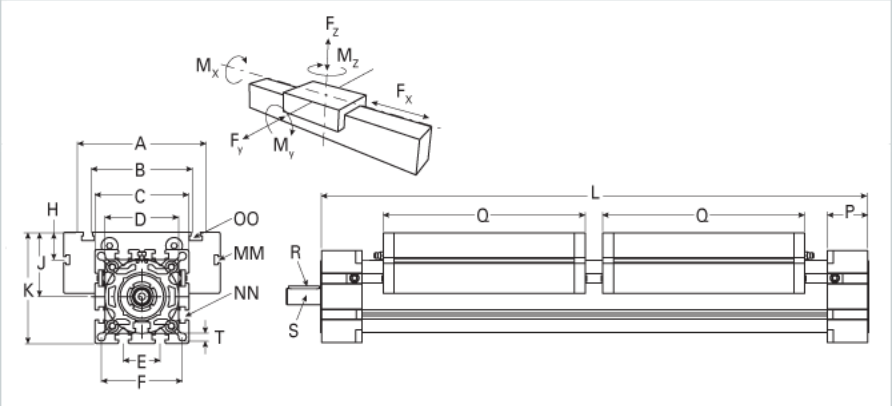

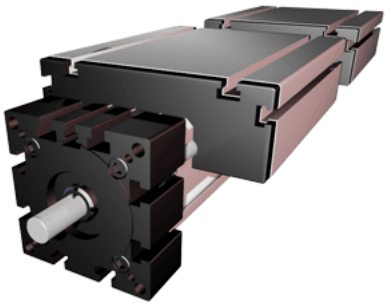

Details	
Size	125
Screw Options	40x7/40x14
Screw Type	Trapezoidal
Dimensions	
Basic Length L [mm]	880
A [mm]	295
B [mm]	200
C [mm]	165
D [mm]	130x1
E [mm]	60
F [mm]	142
G [mm]	-
H [mm]	30
J [mm]	107.5
K [mm]	190
MM	M10
NN	M12
OO	M12
P [mm]	65
Q [mm]	365
R [mm]	8x7x50
S Diameter x Length [mm]	25 x 55
T-Diameter [mm]	13.0
Forces and Torques	
No-load torque [Nm	1.4
Fx dynamic [N]	12000
Fy dynamic [N]	9000
Fz dynamic [N]	4500
Mx dynamic [Nm]	450
My dynamic [Nm]	600
Mz dynamic [Nm]	1150
Fx static [N]	15000
Fy static [N]	12000
Fz static [N]	6000
Mx static [Nm]	600
My static [Nm]	750
Mz static [Nm]	1350
Geometrical moments of inertia of aluminum profile	
Elastic modulus [N/mm²]	70000
Ix [mm⁴]	10150000
Iy [mm⁴]	10150000
Weight	
Additional Weight per 100 mm [kg]	2.89
Basic Weight [kg]	48.0