Product Specification Sheet

PowerTrax NSR-24-PD

Call 800-321-7800 or visit us online at www.nookindustries.com to configure and order your PowerTrax NSR-24-PD today!

2D/3D CAD ONLINE

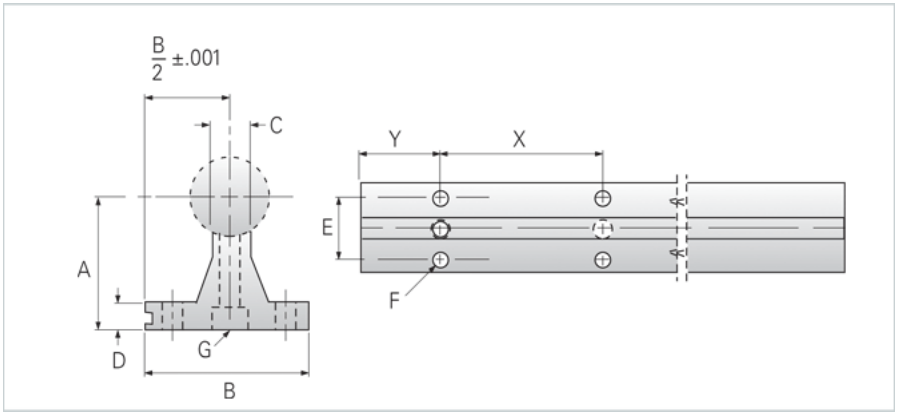

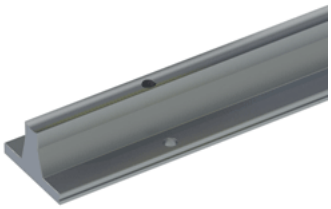

Product Info	
Nominal Shaft Diameter [in]	1.50
Dimensions	
A +/-0.002 [in]	2.500
B [in]	3.00
C [in]	0.688
D [in]	0.375
E [in]	2.25
X	8
Y	4*
F Bolt	3/8"
F Hole [in]	0.406
G Hole [in]	0.406
G Screw	3/8-16x2
Part Number	
24" Part Number	NSR-24-PD-24
36" Part Number	NSR-24-PD-36
48" Part Number	NSR-24-PD-48
Weight	
Weight Per Foot [lb]	2.40