Product Specification Sheet

DD-506-A3/30XX

Call 800-321-7800 or visit us online at www.nookindustries.com to configure and order your DD-506-A3/30XX today!

2D/3D CAD ONLINE

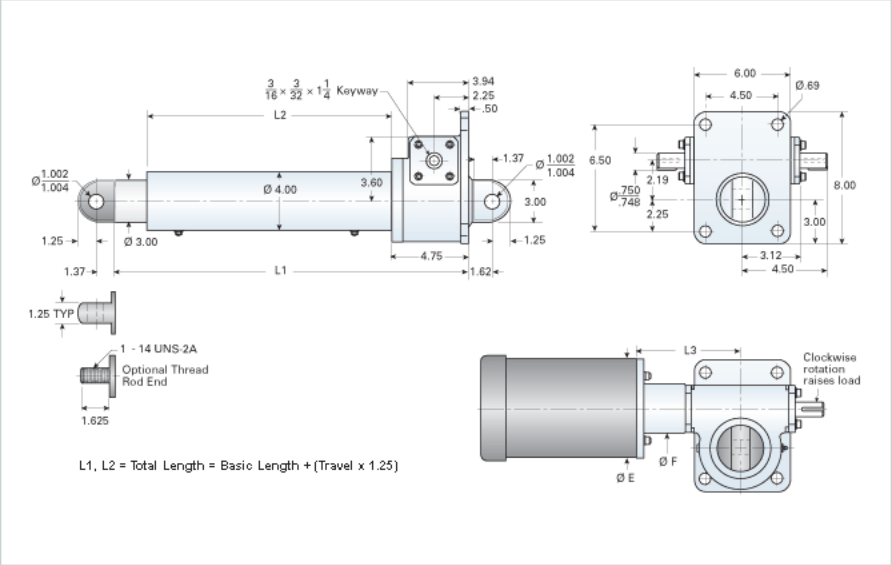

Performance Specifications	
Travel Rate [in/min]	108
Dynamic Capacity [lb]	2900
Motor Horse Power (ref.) [hp]	3
Std. Brake Torque [ft-lb]	15
Approximate Stopping Distance No Load [in]	0.28
Maximum Rod Reaction Torque [in-lb]	432
Details	
Gear Ratio	6:1
Input Turns Per Inch Of Travel	16
Torque To Raise 1 lb. [in-lb]	0.0376
Max Capacity [lb]	10000
Max HP [hp]	3
Weight	
Basic Weight [lb]	53
Per Inch of Travel [lb]	1.87
Tube Dimensions	
L1 Basic Length [in]	12.38
L2 Basic Length [in]	6.06
NEMA 42 Dimensions	
L3 [in]	-
E [in]	-
F [in]	-
NEMA 48 Dimensions	
L3 [in]	-
E [in]	-
F [in]	-
NEMA 56C Dimensions	
L3 [in]	7.25
E [in]	6.75
F [in]	3.75
NEMA 182TC Dimensions	
L3 [in]	8.00
E [in]	9.25
F [in]	3.75
NEMA 184TC Dimensions	
L3 [in]	-
E [in]	-
F [in]	-
NEMA 213TC Dimensions	
L3 [in]	-
E [in]	-
F [in]	-